SNK-RS
RECTANGULAR PORCELAIN UNDERMOUNT SINK

JAMES MARTIN VANITIES

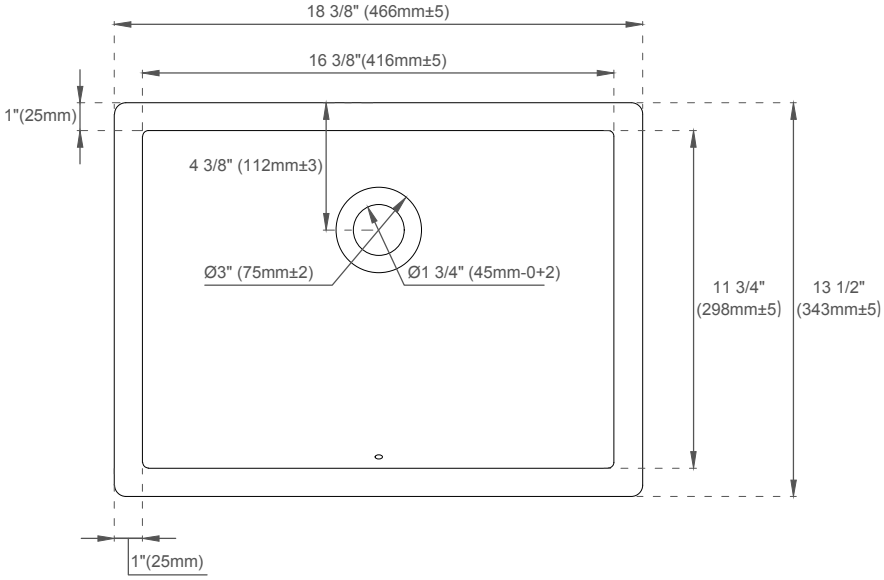

ASME A112.19.2/CSA B45.1

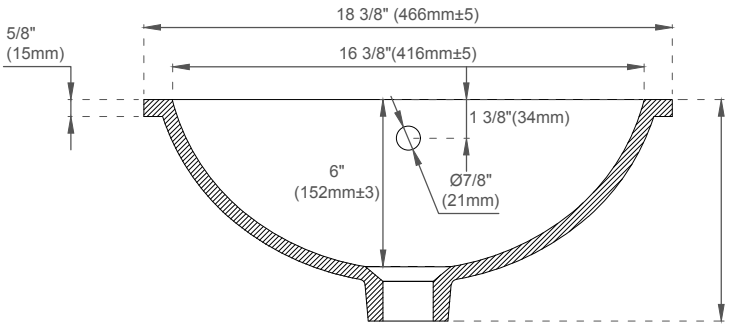

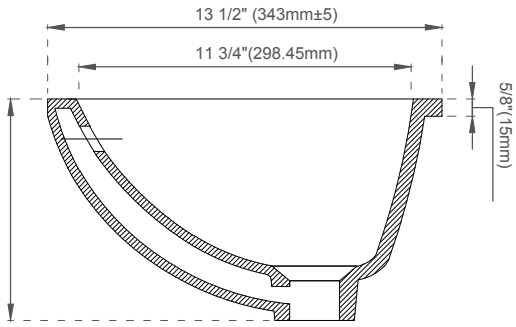

FEATURES:

- Designed to fit with all James Martin Vanities with a 3cm Carrara (090 series) and Solid Surface (080 series) tops
- Sink Material: Porcelain
- Integrated overflow
- Sink shape: Rectangular with straight sides
- Sink(s) ship in a separate carton from the top and vanity
- Sink clips and hardware are not included. All mounting hardware ships with the 3cm quartz tops
- Drain included: NO
- Faucet included: NO
- Overflow cover: NO

EXTERNAL DIMENSIONS:

Length: 18-3/8”

Width: 13-1/2”

Height: 7-7/8”

INTERNAL BASIN DIMENSIONS:

Basin Length: 16-3/8”
Basin Width: 11-3/4”
Basin Depth: 6”
Fits Drain Hole Size: 1-1/2”

All dimensions are nominal

Visit website for warranty and installation information
www.jamesmartinvanities,com

Version: 202301